ItemNo	PART NUMBER	DESCRIPTION	QTY
1	130027	Hazardous Location Conduit Enclosure, CID1 1-Gang, 3/4" Dead End, Aluminum, NEMA 7/9	1
2	130039	Hazardous Location Conduit Cover, CID1 Maintained Lever Button Cover, Start/Stop	1
3	130012	Rigid Conduit, 0.75NPT 1L	2
4	130019	Conduit Box, Capped Elbow, C1D1 0.75NPT	1
5	130005	Sealing Fitting, 0.75 NPT	1
6	110027	Sheet Metal Screw, No. 12 0.75L	4
7	330013	Sealed Contact Block, 1NO/1NC, Class 1, Div. 2	1
8	130040	Legend Plate, CID1 Maintained Lever Button Cover, Start/Stop	1

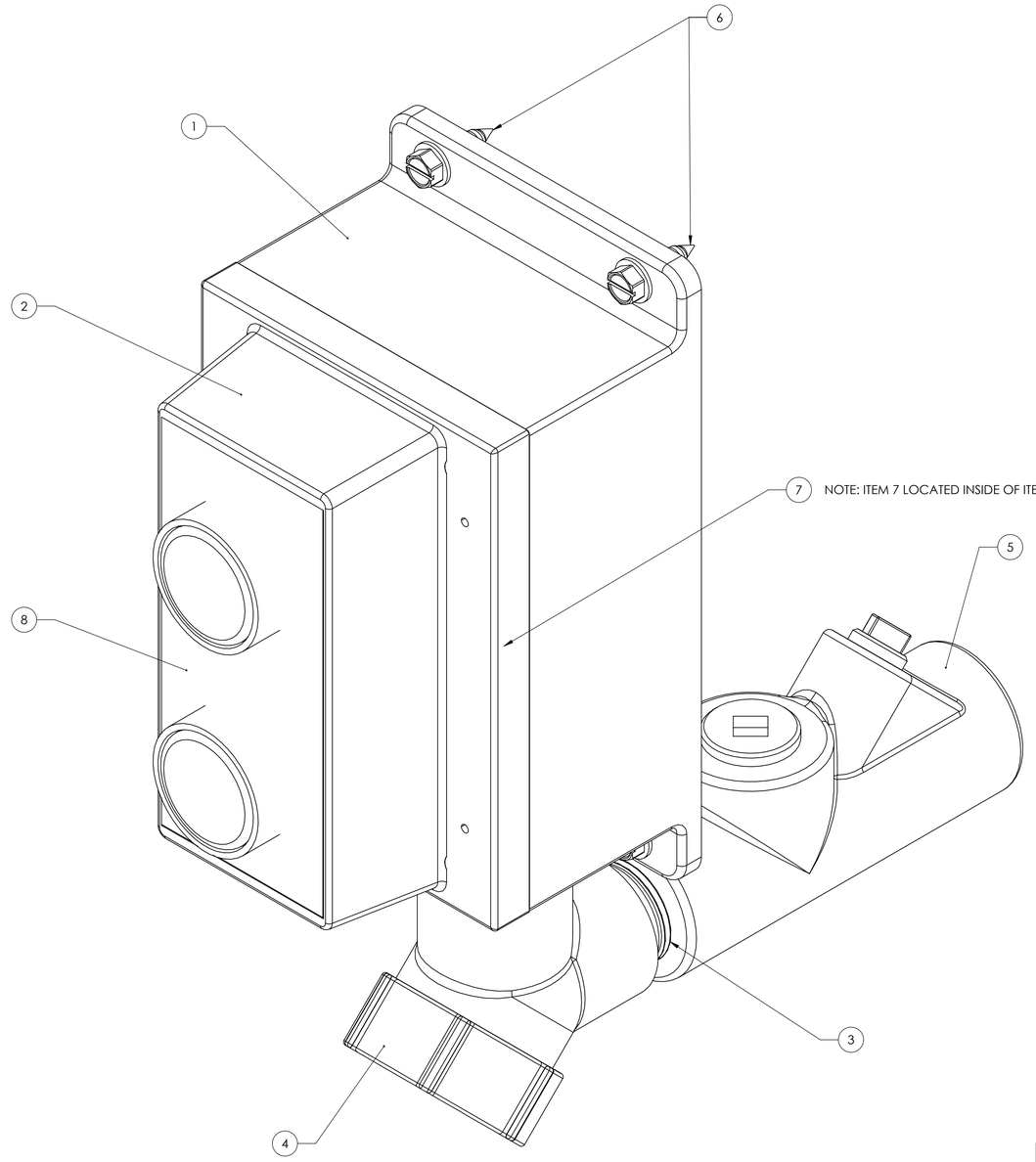

NOTE: ITEM 7 LOCATED INSIDE OF ITEMS 1 AND 2.

ZONE	REV.	DESCRIPTION	DATE	APPROVED
	A	Initial Design Release	08/13/2020	AMS

REVISIONS

HAL EXTRACTION

THE INFORMATION CONTAINED IN THIS DRAWING IS THE SOLE PROPERTY OF HAL EXTRACTION TECHNOLOGY LTD. ANY REPRODUCTION IN PART OR AS A WHOLE WITHOUT THE WRITTEN PERMISSION OF HAL EXTRACTION TECHNOLOGY LTD. IS PROHIBITED.

HAL EXTRACTION TECHNOLOGY LTD.
5902 MCINTYRE ST.
GOLDEN, CO 80403
PHONE: (720)504-4726

TOLERANCES UNLESS OTHERWISE SPECIFIED
.X=±.06
.XX=±.01
.XXX=±.005
.XXXX=±.0005
125
ANGLES ±1/2°

ALL DIMENSIONS IN INCHES UNLESS OTHERWISE NOTED

© 2020 HAL Extraction Technology Ltd. All Rights Reserved

PART NUMBER: 520074

DESCRIPTION: Start/Stop Button, Hazardous Location CID1, Momentary Dual Configuration

DESIGN BY	DATE	WEIGHT
JJG	05/14/2020	6.2 lbs
DRAWN BY: JJG	DATE: 08/12/2020	THIRD ANGLE PROJECTION

SCALE	SHEET	REVISION
1:2	1 of 1	A

FILE NAME: 520074