ItemNo	PART NUMBER	DESCRIPTION	QTY
1	330028	Operator Switch Enclosure, Ordinary Location	1
2	330032	Legend Plate, Ordinary Location 3-Position Switch	1
3	330031	3-Position Switch, Ordinary Location	1
4	330027	3-Position Switch Contact Block, CID2 Booth	1
5	130036	EMT Steel Conduit Connector, Compression X Lock Nut, 0.5 in.	1
6	110028	Pan Head Slotted Screw, 10-24 0.75L	4
7	110029	Pan Head Sheet Metal Screw, Phillips, No. 10 1L	4

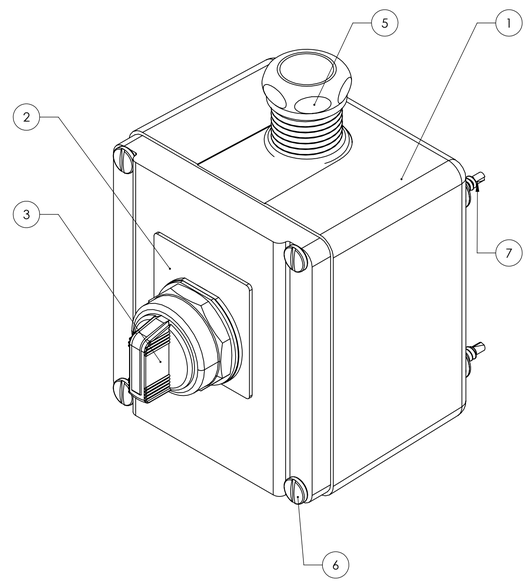

ITEM NO. 4 INTERNAL TO ENCLOSURE

ZONE	REV.	DESCRIPTION	DATE	APPROVED
	B	Sending to Rev Change for Approval and PDF generation	---	---
	A	Archive Migration	4/22/2020	

REVISIONS

HAL EXTRACTION ™

THE INFORMATION CONTAINED IN THIS DRAWING IS THE SOLE PROPERTY OF HAL EXTRACTION TECHNOLOGY LTD. ANY REPRODUCTION IN PART OR AS A WHOLE WITHOUT THE WRITTEN PERMISSION OF HAL EXTRACTION TECHNOLOGY LTD. IS PROHIBITED.

HAL EXTRACTION TECHNOLOGY LTD.
5902 MCINTYRE ST.
GOLDEN, CO 80403
PHONE: (720)504-4726

TOLERANCES UNLESS OTHERWISE SPECIFIED
.X=±.06
.XX=±.01
.XXX=±.005
.XXXX=±.0005
125
ANGLES ±1/2°

ALL DIMENSIONS IN INCHES UNLESS OTHERWISE NOTED

© 2019 HAL Extraction Technology Ltd. All Rights Reserved

PART NUMBER: 520053

DESCRIPTION: Remote Operator Switch, Non Hazardous Location, 3-Position

DESIGN BY	DATE	WEIGHT
JSUTER	3/9/2020	0.653 lbs

DRAWN BY	DATE	THIRD ANGLE PROJECTION	SCALE	SHEET	REVISION
JSUTER	3/9/2020		1:1	1 of 1	B

FILE NAME: 520053