ItemNo	PART NUMBER	DESCRIPTION	QTY
1	330026	Maintained Push Button, Explosion Proof CID2	1
2	330013	Sealed Contact Block, 1NO/1NC, Class 1, Div. 2	1
3	330030	Switch Enclosure, Hazardous Location CID2	1
4	330033	Legend Plate, CID2 Push Button	1
5	130009	Conduit, 1/2" NPT 1" Length	2
6	130020	Conduit Box, Capped Elbow, C1D1 0.5NPT	1
7	130004	Sealing Fitting, 0.5 NPT	1
8	330029	Replacement Push Button Cap, Gold	1
9	110028	Pan Head Slotted Screw, 10-24 0.75L	4
10	110029	Pan Head Sheet Metal Screw, Phillips, No. 10 1L	4

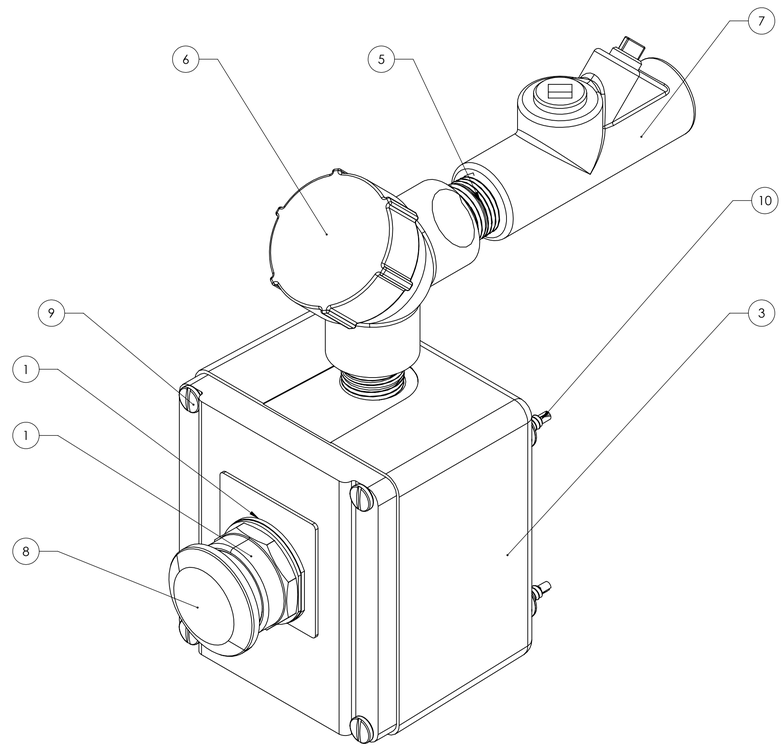

ITEM NO. 4 INTERNAL TO ENCLOSURE

ZONE	REV.	DESCRIPTION	DATE	APPROVED
	B	Sending to Rev Change for Approval and PDF generation	---	---
	A	Archive Migration	4/22/2020	

REVISIONS

HAL EXTRACTION ™

THE INFORMATION CONTAINED IN THIS DRAWING IS THE SOLE PROPERTY OF HAL EXTRACTION TECHNOLOGY LTD. ANY REPRODUCTION IN PART OR AS A WHOLE WITHOUT THE WRITTEN PERMISSION OF HAL EXTRACTION TECHNOLOGY LTD. IS PROHIBITED.

HAL EXTRACTION TECHNOLOGY LTD.
5902 MCINTYRE ST.
GOLDEN, CO 80403
PHONE: (720)504-4726

TOLERANCES UNLESS OTHERWISE SPECIFIED
.X=±.06
.XX=±.01
.XXX=±.005
.XXXX=±.0005
125
ANGLES ±1/2°

ALL DIMENSIONS IN INCHES UNLESS OTHERWISE NOTED

© 2019 HAL Extraction Technology Ltd. All Rights Reserved

PART NUMBER: 520052

DESCRIPTION: Panic Button, Hazardous Location CID2, Maintained Push-Pull Yellow

DESIGN BY	DATE	WEIGHT
JSUTER	3/9/2020	2.173 lbs

DRAWN BY	DATE	THIRD ANGLE PROJECTION	SCALE	SHEET	REVISION
JSUTER	3/9/2020		1:2	1 of 1	B

FILE NAME: 520052