NOTE:

1. MATERIAL: NOTED IN BOM
2. DEBURR AND REMOVE ALL SHARP EDGES
3. FINISH: POWDER COAT WH08 WHITE SEMI-GLOSS
4. ALL BENDS ARE 90° UNLESS OTHERWISE NOTED

ItemNo	PART NUMBER	DESCRIPTION	QTY
1	330022	Fire Alarm, Explosion Proof CID1, 24VDC	1
2	130023	Conduit, 0.75 NPT, 3" Length	1
3	130005	Sealing Fitting, 0.75 NPT	1
4	330039	Bracket, Wall Mount, CID1 Fire Alarm	1
5	330040	Elbow, Wall Mount, CID1 Fire Alarm	1
6	110027	Sheet Metal Screw, No. 12 0.75L	4

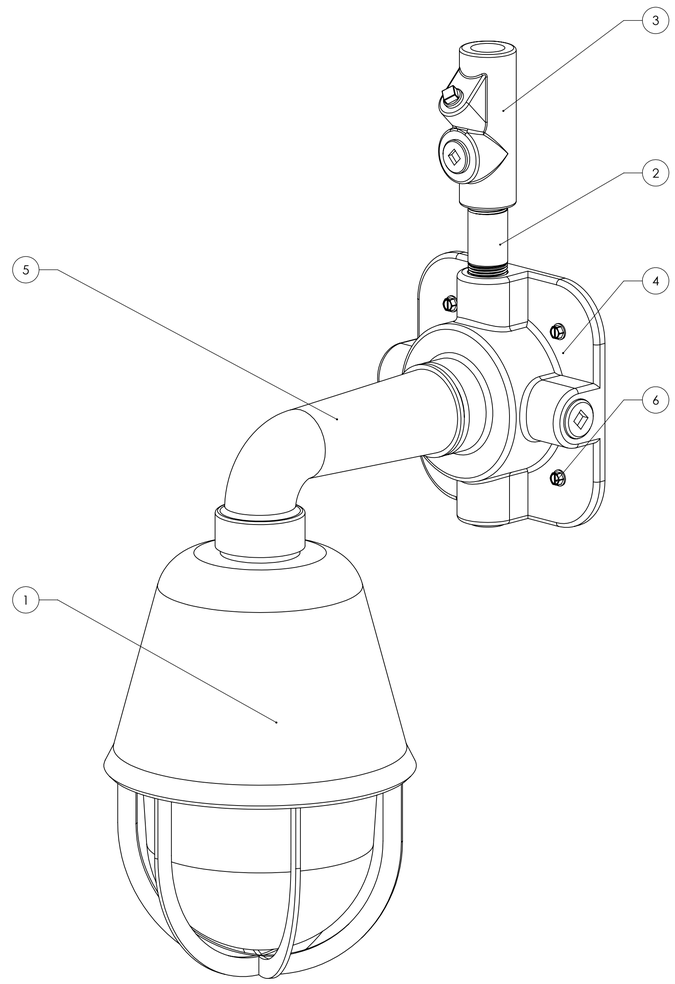

ZONE	REV.	DESCRIPTION	DATE	APPROVED
	A	Initial Design Release	10/16/2020	JJG

REVISIONS

HAL EXTRACTION (TM)

THE INFORMATION CONTAINED IN THIS DRAWING IS THE SOLE PROPERTY OF HAL EXTRACTION TECHNOLOGY LTD. ANY REPRODUCTION IN PART OR AS A WHOLE WITHOUT THE WRITTEN PERMISSION OF HAL EXTRACTION TECHNOLOGY LTD. IS PROHIBITED.

HAL EXTRACTION TECHNOLOGY LTD.
5902 MCINTYRE ST.
GOLDEN, CO 80403
PHONE: (720)504-4726

TOLERANCES UNLESS OTHERWISE SPECIFIED
X=±.06
.XX=±.01
.XXX=±.005
.XXXX=±.0005
125
ANGLES ±1/2°

ALL DIMENSIONS IN INCHES UNLESS OTHERWISE NOTED

© 2020 HAL Extraction Technology Ltd. All Rights Reserved

PART NUMBER: 520043

DESCRIPTION: Fire Alarm, Hazardous Location CID1, 24VDC

DESIGN BY	DATE	WEIGHT
JGLADFELTER	02/26/2019	15 lbs

DRAWN BY	DATE	THIRD ANGLE PROJECTION	SCALE	SHEET	REVISION
JAS	10/16/2020		1:4	1 of 1	A

FILE NAME: 520043